NetIrrigate® Installation Diagram
Zimmatic AIMS Panels

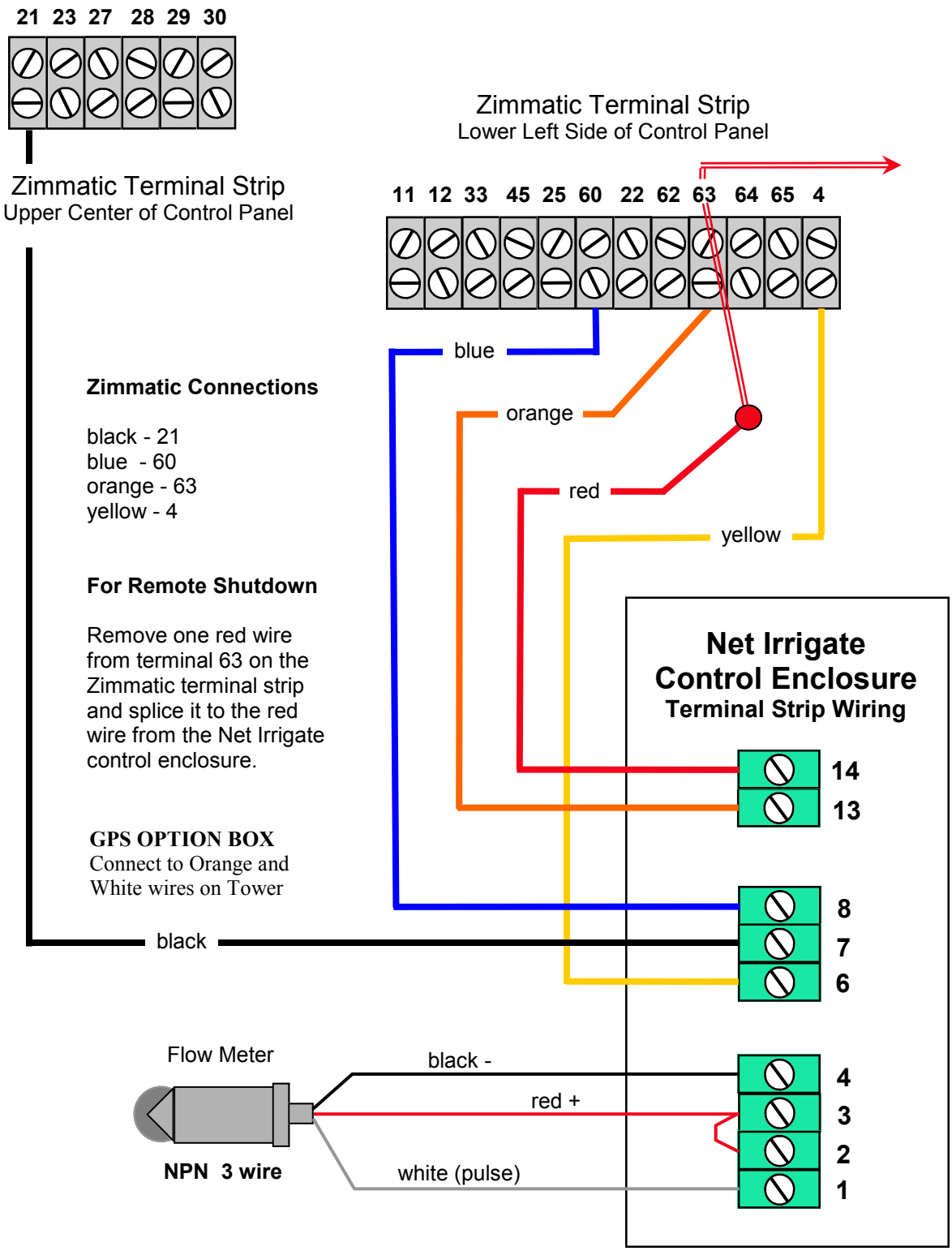

Copyright Net Irrigate LLC